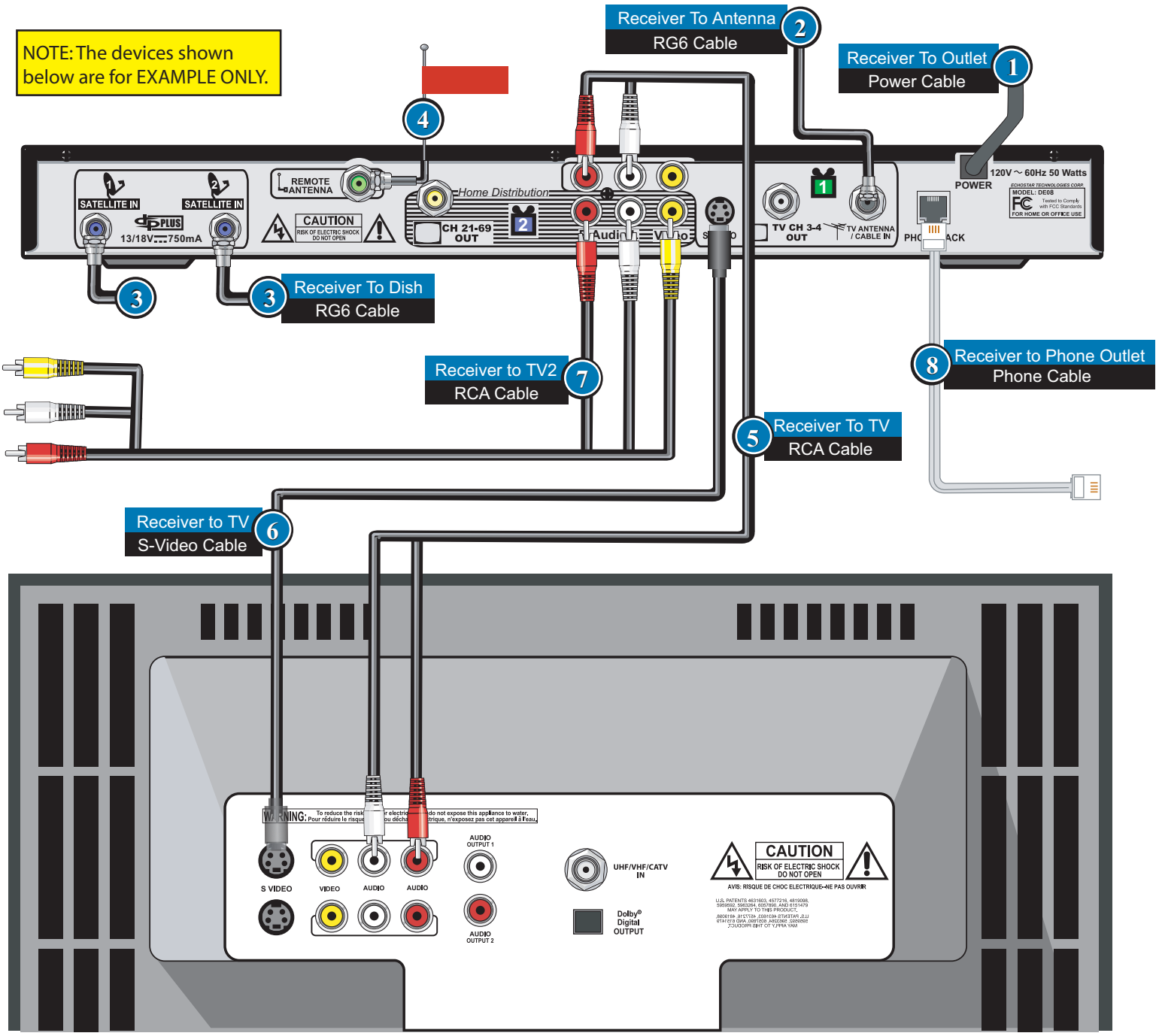# DISH 322 S-Video Cable Connections